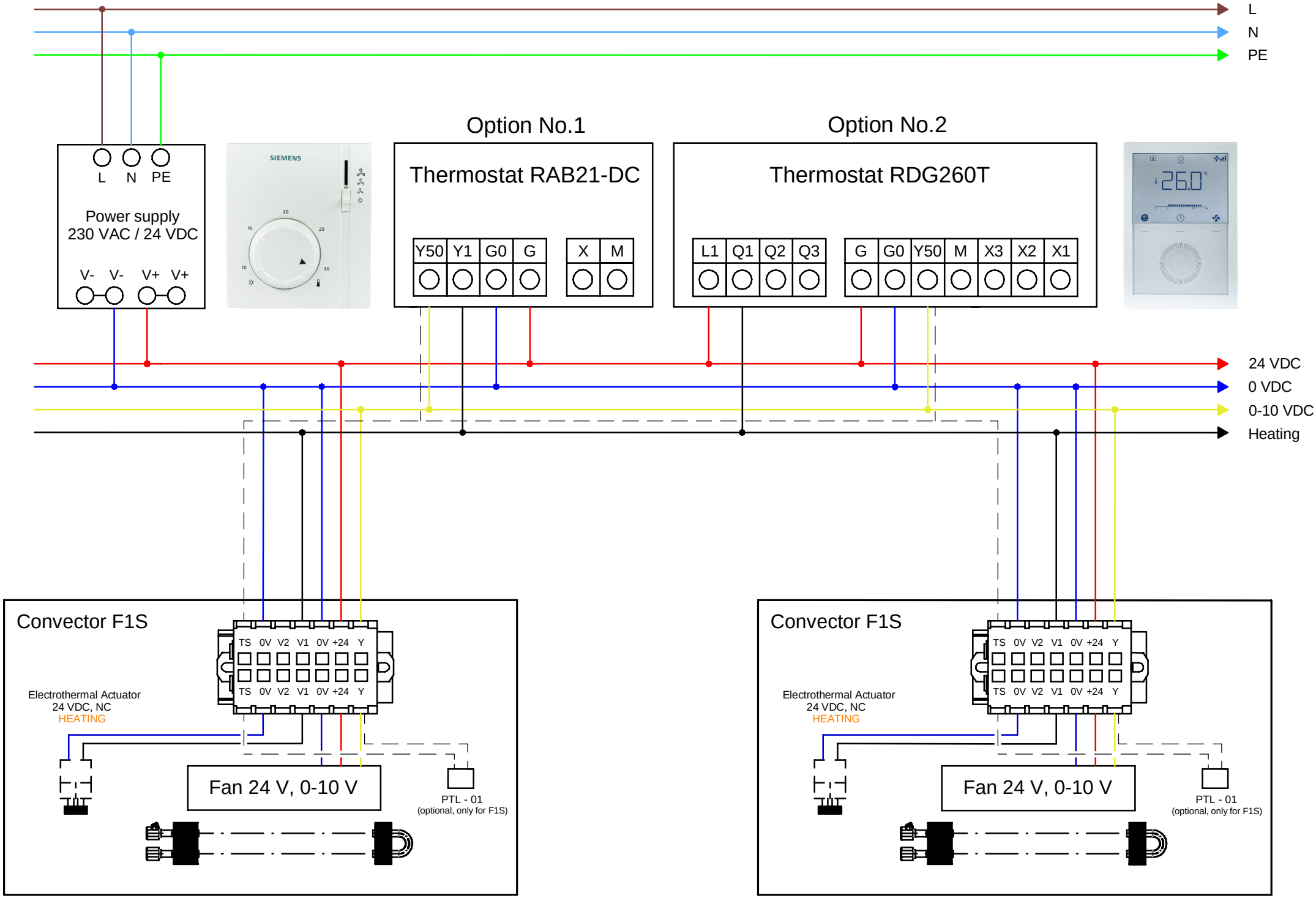
L
N
PE
Option No.1
Option No.2
L N PE
Power supply
230 VAC / 24 VDC
V- V- V+ V+
SIEMENS
Thermostat RAB21-DC
Y50 Y1 G0 G
X M
Thermostat RDG260T
L1 Q1 Q2 Q3
G G0 Y50 M X3 X2 X1
24 VDC
0 VDC
0-10 VDC
Heating
Convector F1S
TS 0V V2 V1 0V +24 Y
TS 0V V2 V1 0V +24 Y
Electrothermal Actuator
24 VDC, NC
HEATING
Fan 24 V, 0-10 V
PTL - 01
(optional, only for F1S)
Convector F1S
TS 0V V2 V1 0V +24 Y
TS 0V V2 V1 0V +24 Y
Electrothermal Actuator
24 VDC, NC
HEATING
Fan 24 V, 0-10 V
PTL - 01
(optional, only for F1S)